53212030 HANSA - Cover part for bath and shower faucet

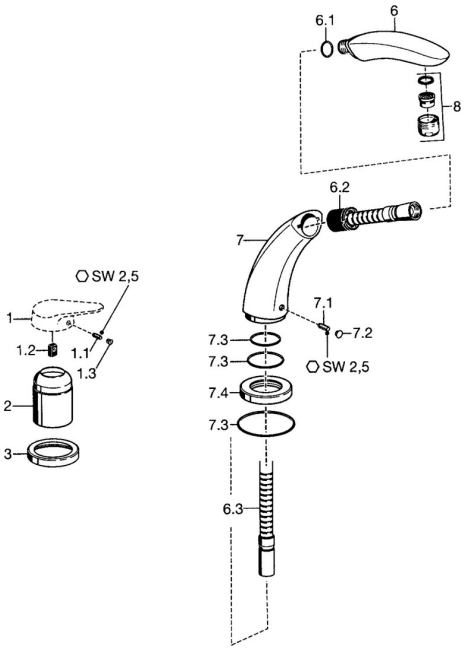

EAN: 4015474048256
static.hansa.com/53212030

Spare parts

SP53212030

	Name	Code
1.1	Screw, M5x8, SW2.5	59904755
1.2	Bushing	59904778
1.3	Plug, hot/cold	59906705
2	Covering cap Chrome	59904820
3	Cover flange Chrome	59912259
6	Hand shower Chrome Discontinued	59912295
6.1	Gasket ring, d 21x12x2	59912304
6.2	Fixing sleeve Discontinued	59912294
6.3	Hose, G1/2xG3/8 Chrome Discontinued	59912293
7.1	Pin, M6x10, SW2.6 Discontinued	59912292
7.2	Cover plug Chrome	59911840
7.3	Sealing kit	59912276
7.4	Cover flange Chrome	59912278

© 2024 Hansa Armaturen GmbH - www.hansa.com - 03.04.2024